Data Sheet

Article number: 1405012241
Description: KLEE fork joint with outside thread
G 12x24 med 12x1,75 mm thread

Measures

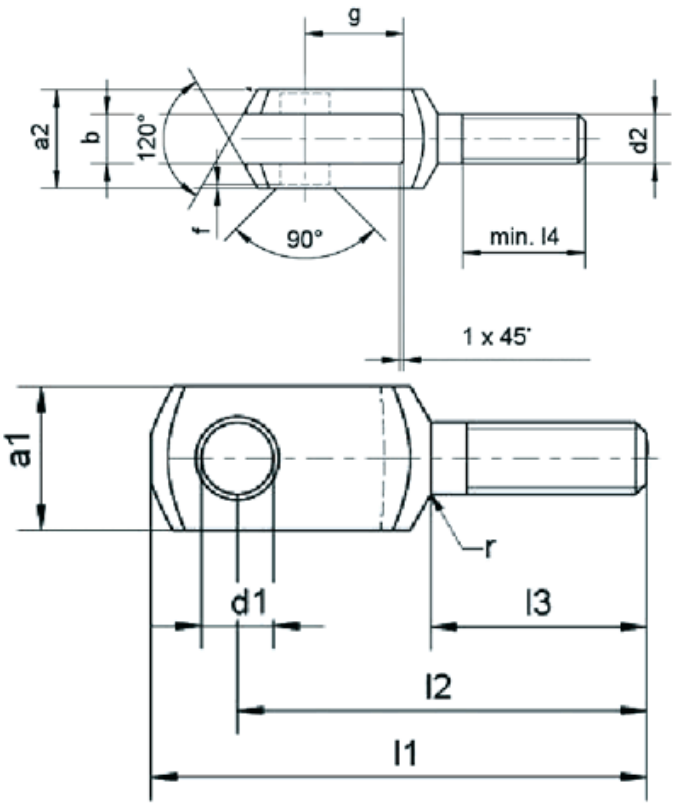

a1 = 24	l2 = 68
a2 = 24	l3 = 35
b = 12	l4 = 30
d1 = 12	r = 0,8
d2 = M 12x1,75	
f = 0,5	
g = 24	
l1 = 82	

Product drawings and brochures of any kind may contain errors for which Brd. Klee A/S cannot be liable.